CHICAGO FAUCETS®
a Geberit company
2100 South Clearwater Drive
Des Plaines, IL 60018
Phone: 847-803-5000
Fax: 847-803-5454
www.chicagofaucets.com

FOR TECHNICAL ASSISTANCE
1-800-TEC-TRUE (1-800-832-8783)

REPAIR PARTS

BY: SID	DATE: 05-10-11
CHK:	REV: 01-26-12

FITTING NO.
116.924.AB.1
SUBMITTED MODEL NO.
ITEM NO.

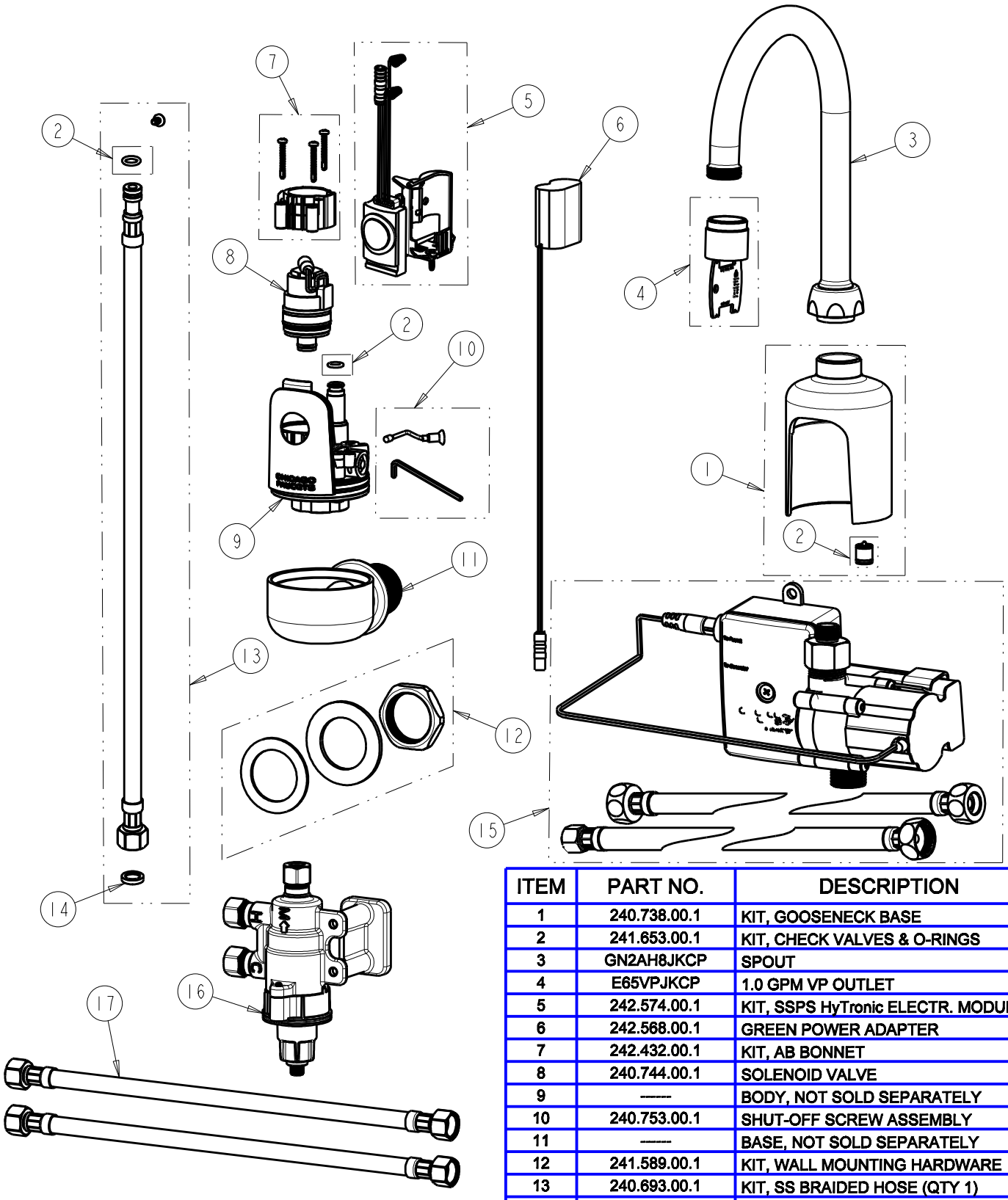

ITEM	PART NO.	DESCRIPTION
1	240.738.00.1	KIT, GOOSENECK BASE
2	241.653.00.1	KIT, CHECK VALVES & O-RINGS
3	GN2AH8JKCP	SPOUT
4	E65VPJKCP	1.0 GPM VP OUTLET
5	242.574.00.1	KIT, SSPS HyTronic ELECTR. MODULE
6	242.568.00.1	GREEN POWER ADAPTER
7	242.432.00.1	KIT, AB BONNET
8	240.744.00.1	SOLENOID VALVE
9	------	BODY, NOT SOLD SEPARATELY
10	240.753.00.1	SHUT-OFF SCREW ASSEMBLY
11	------	BASE, NOT SOLD SEPARATELY
12	241.589.00.1	KIT, WALL MOUNTING HARDWARE
13	240.693.00.1	KIT, SS BRAIDED HOSE (QTY 1)
14	3300-005JKNF	FILTER/SCREEN
15	242.566.AB.1	SSPS ASSEMBLY
16	131-ABNF	THERMOSTATIC AB MIXING VALVE
17	------	HOSE, 12" 3/8" x 3/8" COMPRESSION